Hendricks Electret Microphone Assembly

First off, check to see if the parts match the parts list…

1 –1/2” x 4” long CPVC tube
2 – 5/8” I.D. vinyl tube caps
1 – 4-40 brass nut
1 – 4-40 x 1/2” long flat head s.s. screw
1 – PCB
1 - #4 x 1/16” thick nylon washer
1 – S1, pushbutton switch
1 – Electret microphone element
30” – 2 cond. shielded wire, w/ molded 3.5mm stereo plug
1 – C1, .001uF capacitor
1 – 1/4w resistor, any value, only the wire is used

Microphone element specifications are:

Sensitivity: 44±(0dB=1V/Pa,1KHZ)
Output impedance: 2.2KΩ(Max)
Frequency Range: 70-20KHz
Standard operating Voltage: 3.0V
Current Consumption: 0.5mA(Max)
S/N ratio: >58dB
Assembled weight: 1.4oz. (40gm.)

Please read all the instructions before starting the assembly.

- Start by printing out the drill template, found at the end of this document, that will wrap around the tube to provide the locations for the two 3/16” diameter holes to be drilled into the CPVC tube. To get the hole locations in the proper place it will be necessary for you to scale the printed template so that is measures 4” long, as indicated. Cut out the template and wrap it around the tube and tape it securely. Use a center punch or sharpened nail to mark the centers of the holes. Remove the template and drill the two holes with a 3/16” diameter drill through one wall only of the tubing. Set the drilled tube aside for later.

- We will now solder the 4-40 brass nut to the top (silkscreened) side of the pcb. Secure it temporarily, from below with the 4-40 flathead screw as shown below, and solder it to the pcb. Do not get any solder on the top of the nut, or the threads. We will need that surface flat. Remove the screw, and glue the nylon washer centered on the top of the 4-40 nut as shown, with some superglue. Be careful not to get any adhesive in the threads of the nut.

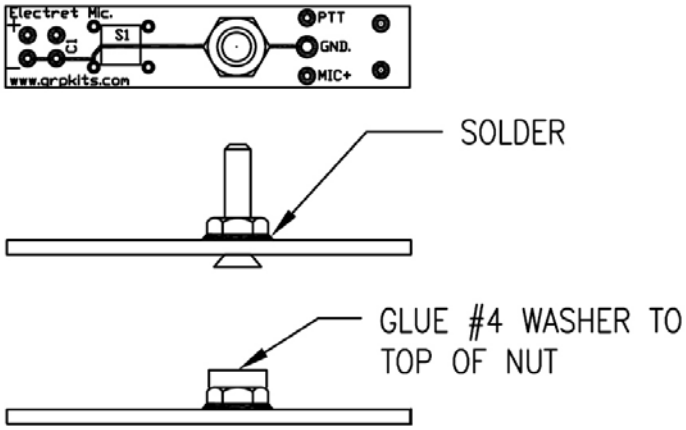

- Next we will install the switch, S1, and the capacitor, C1 on the top (silkscreened side) of the board. The microphone element is installed from the bottom of the board to the dimension shown below. Be sure to observe the polarity of the mic. element as shown on the graphic and marked on the pcb.

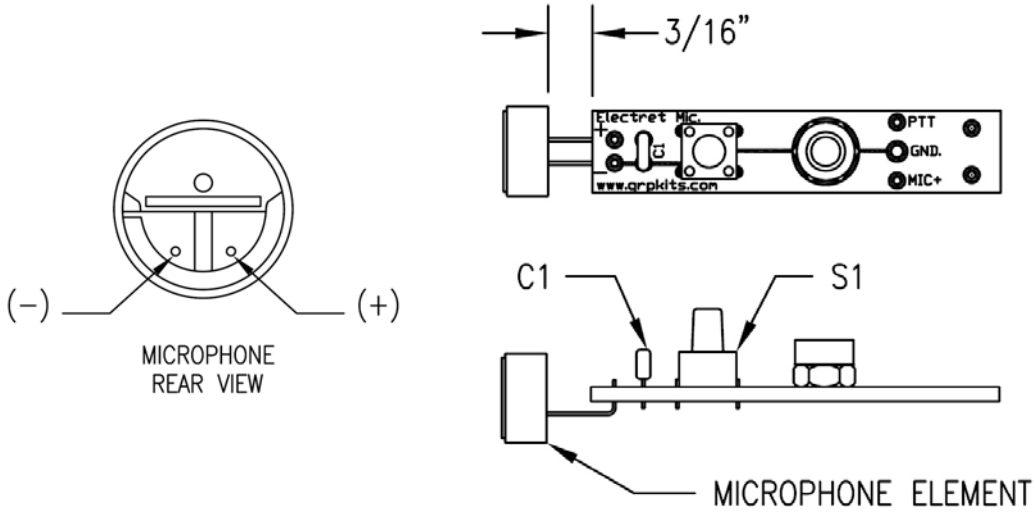

- Now is a good time to prepare the vinyl caps by melting a hole in the center of each one of them with your soldering iron. High heat is not required, as it may char the plastic. The end cap at the microphone will require an approximate diameter of 3/16" to 1/4". The hole for the cable can be a little smaller at 1/8" diameter. You can trim up any flash with a small xacto knife.

- Next, we will attach the shielded cable/plug assembly to the pcb. ***First, slide the vinyl cap for the audio cable, facing the correct direction.*** Decide which connections, tip, sleeve, or base you want for the PTT, MIC.+, and GND. Check which color you need for the supplied cable assembly, with your ohm meter. Carefully strip and tin the end of the 30" cable assembly, and solder it to the three connections as shown in the graphic below. The strain relief is accomplished by cutting one end of the resistor lead and using the wire to loop through the top of the board and twist tie, or solder to the bottom of the board. You may eliminate the twist if you solder the resistor loop to the bottom of the board. If you choose this option, solder quickly so the hot wire does not melt through the outer insulation and short the inner two conductors. Clip all component and cable leads close to the bottom of the pcb, except the mic. element leads. You will need this clearance in order to insert the assembly into the tube.

- **Test:** Now is good time to check the connections at the 3.5mm plug end. You should see continuity between the base of the 3.5mm connector and the connection you chose for PTT, when you press the PTT switch. You should see approx. 1.3K – 1.7K ohms across the base of the 3.5mm connector and the connection you chose for the microphone output.

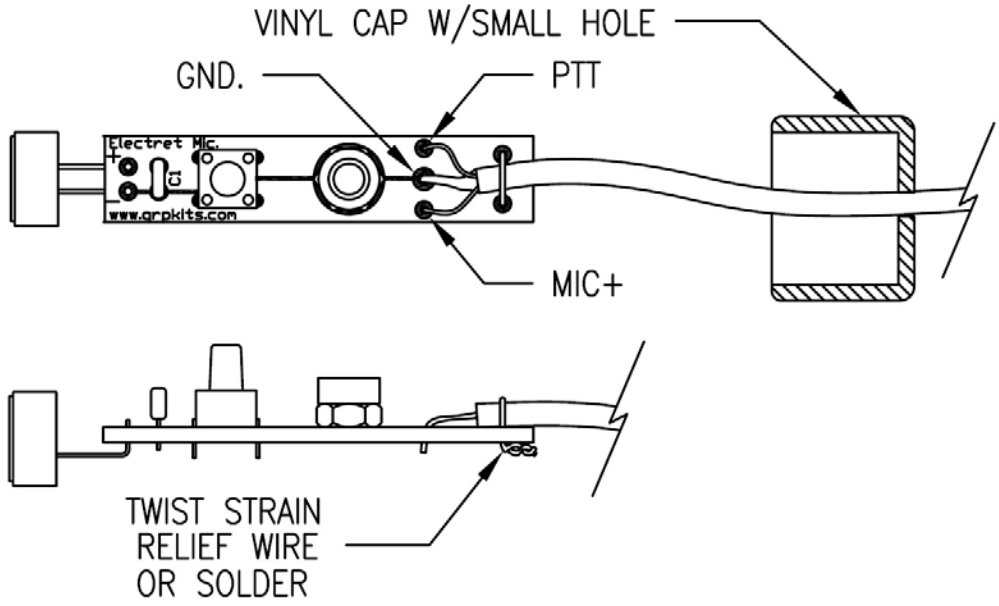

- Now we can complete the mechanical assembly. The microphone element enters the tube first from the rear as shown below. We insert it from this end, so we are not pressing on the front of the microphone.

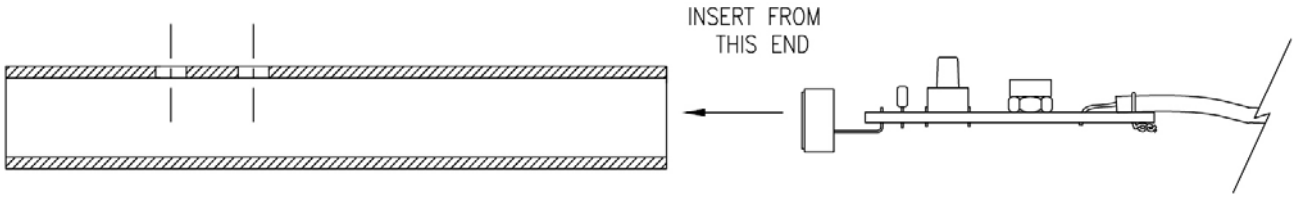

- Slide through until the switch button is in line with the forward hole. You can now insert the 4-40 x 1/2" flathead screw and secure the pcb to the inside of the tube.

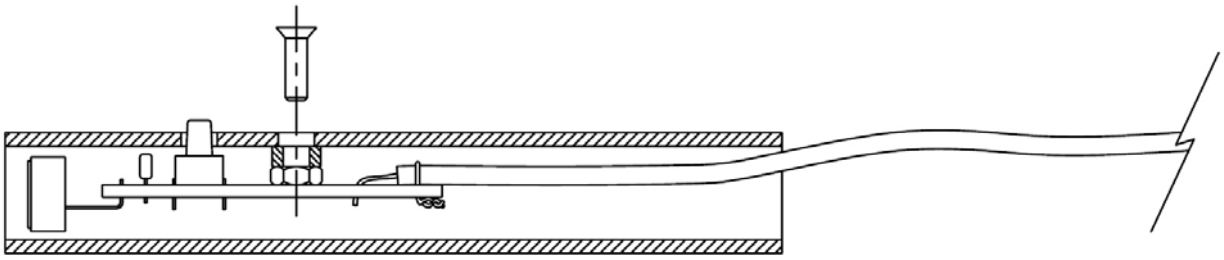

- The dead space behind the microphone can adversely affect the 700 Hz to 1100 Hz frequency response of the assembly, and can be improved by pushing a cotton ball with a pencil up the tube behind the microphone pcb, eliminating the dead space in the bottom of the tube. Now slide up the vinyl cap up the cable to the tube, and install the vinyl cap on the microphone end. This completes the assembly.

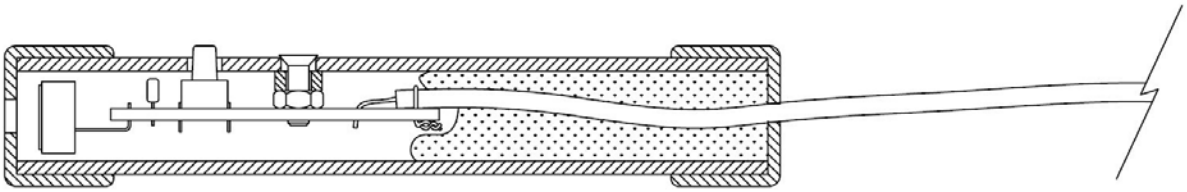

Electret microphones require a small amount of power to operate. This power is supplied at the MIC+/Audio Out lead through a dropping resistor, and a blocking capacitor is required in the radio side of the mic. input to keep the V+ from the audio input. A typical connection scheme can be seen at http://en.wikipedia.org/wiki/Electret_microphone. An actual application can be seen on page 52 of the Hendricks BitX schematic, which is setup for an electret microphone, http://www.qrpkits.com/files/BITX17A_Assembly_Manual_032209.pdf ,but there are many sources on the web for similar information.

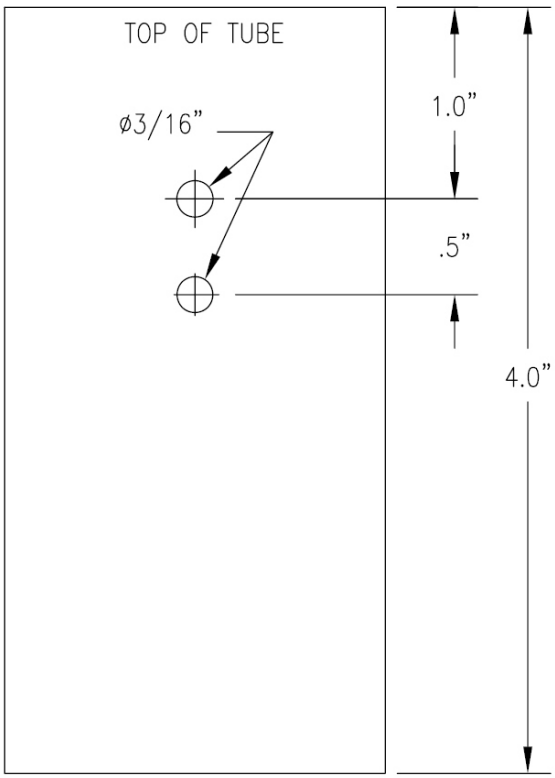

Drill template

electret_assembly_030613.pdf